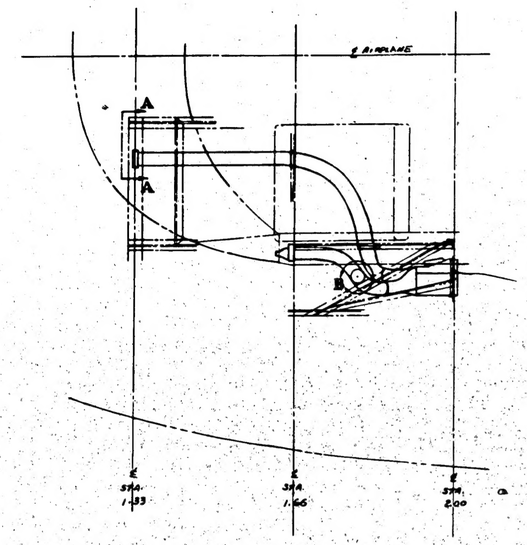

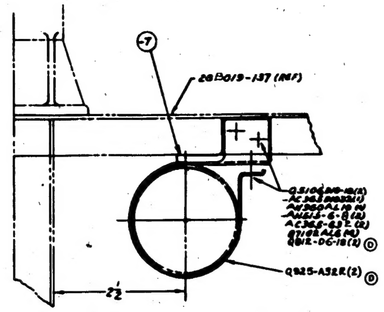

SECTION A - A
FULL SIZE.

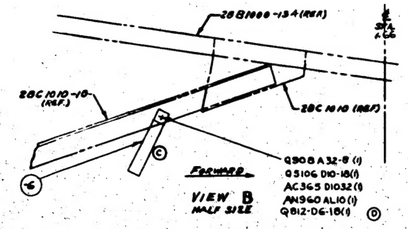

VIEW B
HALF SIZE

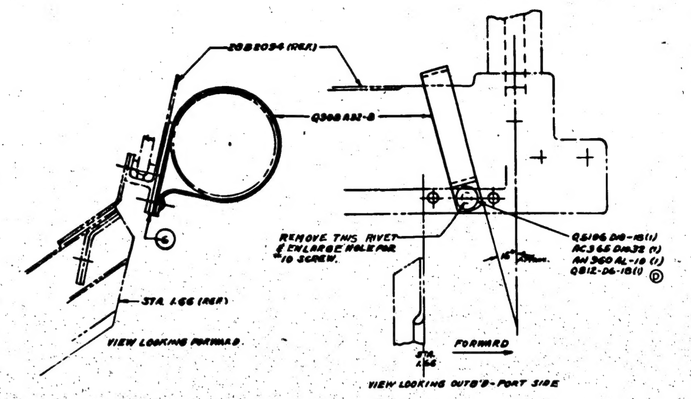

VIEW C
FULL SIZE.

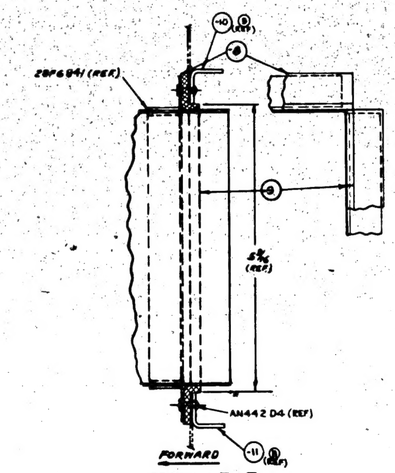

SECTION E-E

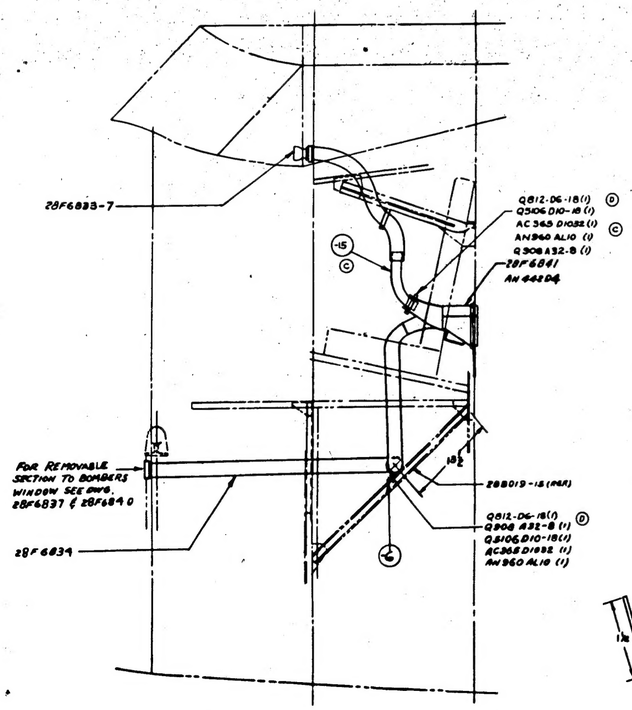

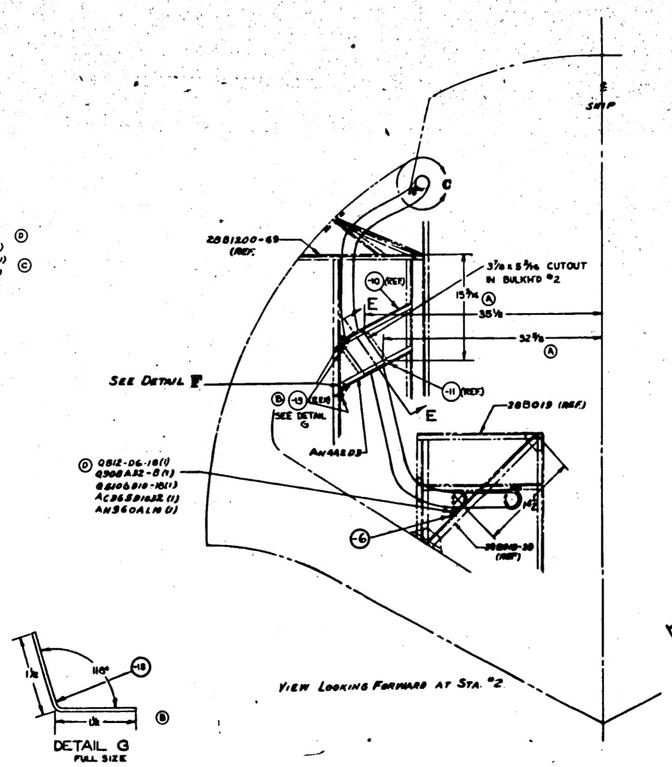

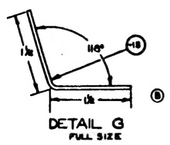

DETAIL G
FULL SIZE

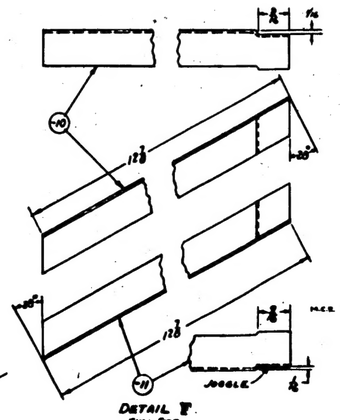

DETAIL F
FULL SIZE

SYM	ALTERATION	DATE	BY	SYM	ALTERATION	DATE	BY
				A	DEL. RIVETS WAS 32 PER DWG. 28 RIVETS WAS 28 PER DWG. 18 DEL. ONE (1) NO WAT. CHG.	12-5-44	E.O. A61987 M.C. 84
				B	CHG. LOCATION OF -10 & -11 FROM STA. 7 TO 8 SIDE OF BULKHD. ADDED -13 (2) AND REMOVE "A" NOT CHG. WEIGHT	11-20-44	E.O. A64177
				C	ADDED -15 & -16 (R.H. & L.H.) WAS (1) AC 365 D1032 (1) WAS (1) AN960 AL10 (1) WAS (1) Q908 A32-8 (1) WAS (1) IN VIEW "A" CHG. LOCATION OF CL-18 NOT CHG. WEIGHT	12-5-44	E.O. A66304
				D	IN VIEW "A" ADD Q925-A32R (2) WAS Q925-A32U (1) ADDED Q812-D6-18(1) & Q5106-D10-18 (2) WAS Q5106 D10-18 (1) NO CHG. WEIGHT	12-22-44	
				E	CHG. C.A.S. NO. 18 B/N OF -6 -7 -8 & -9 FROM FAB'D-IN TO R.A.D. 36-80	1-6-45	

SYM	ALTERATION	DATE	BY
	28F6833-7 28F6841 28F6839		
	28B19-D6-18 28B2019-6 Q812-D6-18 Q925-A32R 28B2019-137 Q925-A32R AN442D4-6		
	AC365-D1032 AC365-D1032 AN960-AL10 AN960-AL10 Q908-A32-8 Q908-A32-8		
	-18 28B2019-15 MATL THICKNESS 4 4 T 18 -16 28B2019-16 MATL AL 2024 4 T 18		
	-15 28F6839-7 RIVET 1/8		
	-14 28F6839-6 RIVET 1/8		
	-13 28F6839-5 1/4 NEOPRENE COMPRESSION SEAL		
	-12 28F6839-4 1/4 NEOPRENE COMPRESSION SEAL		
	-11 28F6839-3 1/8 Rivet and Washer Fabricated		
	-10 28F6839-2 1/8 Rivet and Washer Fabricated		

PART NO.	ORDER	MATERIAL	SPEC	-0	-3	-4	-8
	PARTS LIST FOR ASSY.						

AS			
CUSTY			
WEIGHT TRIGHT	FINISH	DRAFT	CHECK

INSTALL. - FURNS.
CENTRAL HYD. SYSTEM - STA. 33 TO 8
CONSOLIDATED AIRCRAFT CORP. San Diego, Calif.

SCALE J
28F6843

H 397

28F6843 R